Legend A	
A.	GRAF Carat S 1700 Gallon Underground Tank (1)
B.	GRAF Carat S 1700 Gallon Underground Extension Tank (1)
C.	4" Schedule 40 PVC Pipe
D.	4" Serco Muti Tite Gasket
E.	2" Schedule 40 PVC Pipe Linking Tanks
F.	2" Banjo Bulkhead Fitting
G.	Gravel Base and Backfill (Bottom Half)
H.	Native Soil Backfill (Above Tank)
I.	Riser Extension for Tank Access (12")
J.	2" Screened Tank Vent

Legend B	
1.	GRAF Carat S 1700 Gallon Underground Tank
2.	GRAF Optimax High efficiency, self-cleaning, below ground filtration system.
3.	Tank Dome with Sealing Gasket.
4.	RainFlo 115V Automatic Pump Controller fully automates pump operation and provides run dry protection.
5.	4 or 6" Overflow drain to storm drain or other. Typically PVC S&D or Schedule 40 Pipe.
6.	1- 1/4" Bulkhead Fitting for plumbing thru tank or riser assembly
7.	115v Power supply to Pump Control and Pump
8.	Overflow siphon with mosquito and rodent stop
9.	GRAF 1-1/4" Floating Pump Extractor with 1200 Micron Coarse Screen
10.	RainFlo 1.25 HP Submersible Rainwater Pump High performance submersible rainwater pump with stainless steel base and 1-1/4" threaded inlet for use with a floating filter.
11.	4" Serco Multi Tite Gasket at Inlet and Outlet
12.	4" PVC from Roof Gutters and Downspouts
13.	1 1/4" Schedule 40 PVC Pump output to 3 Way Valve
14.	Calming inlet to prevent the disturbance of the fine sediment layer at bottom of tank
15.	Adjustable Riser and Childproof Lid
16.	4"Fernco Couplers for Pipe Connection to Optimax
17.	Clean water Outlet On Graf Optimax to Rain Collection Tank
18.	Control Box and Water Level Sensor for Aqua Control (Rainwater System Controller)
19.	Brass 3Way Valve with 24v Motorized Actuator and 1-1/4" Connections
20.	Municipal Water Supply Connection to 3 Way Valve

GRAF Carat S 1700 Gallon Tank Specifications:

* Variable burial depth: 30" to 42" (59" Max. with optional dome extension and "Maxi" telescopic riser)
* Unique in the world! – unique manufacturing process produces the highest stability due to latest techniques
* Unique fit accuracy of the components thanks to new production process
* Consistent quality due to TÜV safety testing and production monitoring
* Vehicle-bearing (with telescopic cast iron manway kit)
* Groundwater stable up to the middle of the tank due to extremely rigid construction
* Secure investment with market leading 15-year warranty
* Made from high quality Duralene; easy to recycle
* Can be expanded as required

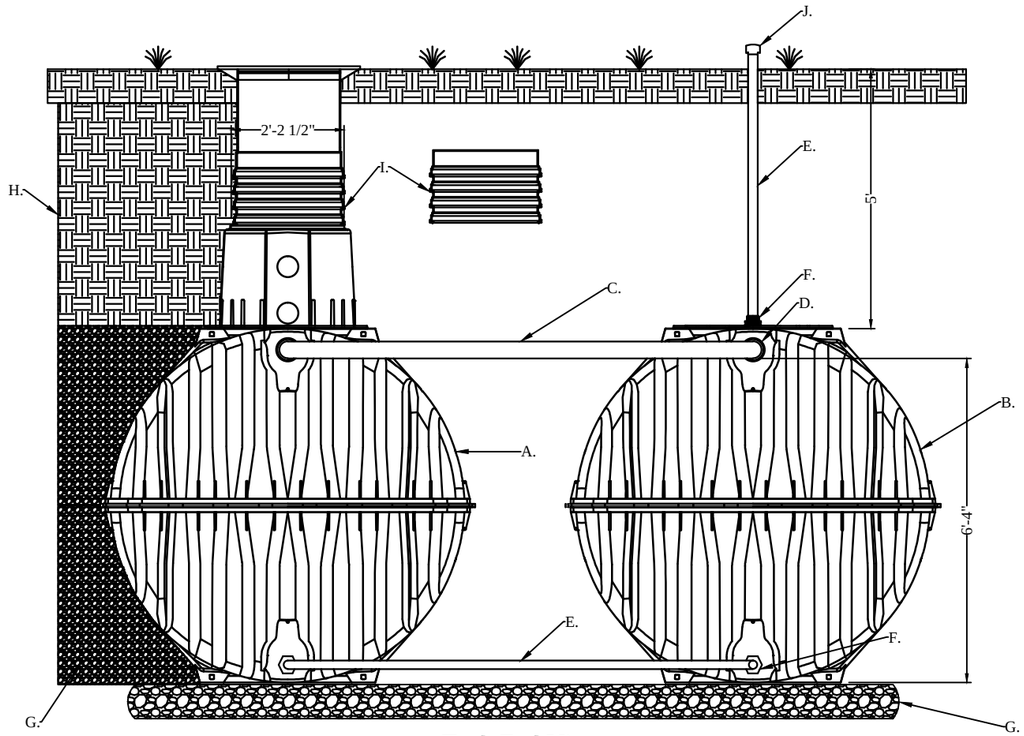

Tank End View
3400 Gallon System

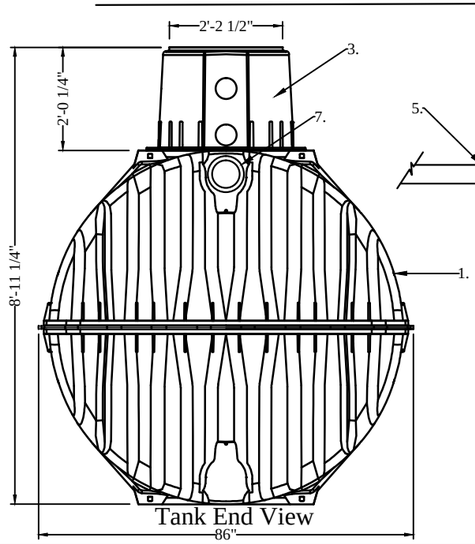

Tank End View

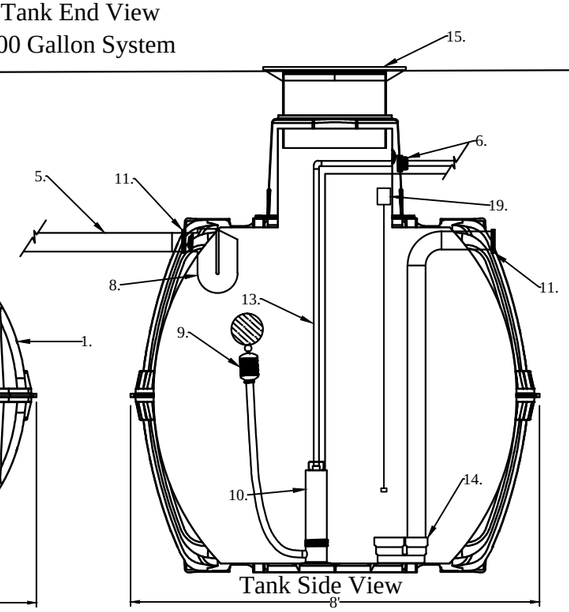

Tank Side View

USER'S Responsibility
Untreated Rainwater is NON-Potable water. Warning do not drink water supplied from RainHarvest Systems rainwater systems and related equipment. We will be happy to offer suggestions on the use of our various products either by way of printed material or through direct contact with RainHarvest Systems team members. However, since we have no control over the use of our products once they are shipped, NO WARRANTY WHETHER OF MERCHANTABILITY, FITNESS FOR PURPOSE, OR OTHERWISE is made beyond the repair, replacement, or refund of purchase price at the sole discretion of RainHarvest Systems. Users shall determine the suitability of the product for the intended application before using, and the users assume all risk and liability whatsoever in connection therewith, regardless of any team members suggestions or statements as to the application or construction. In no event shall any remedy exceed the purchase price of the product. Consult local building codes for the system use.

GRAF Optimax High efficiency, self-cleaning, below ground filtration system:

* Variable installation depth from 22-44 inches
* Flush installation at ground level
* Only 7.87" height offset between inlet and outlet
* 0.35mm (.01") mesh filter
* Lockable childproof cover
* Optional Opticlean® Sprayhead
* Available with vehicle-loading cast iron lid
* Over 95% yield
* Self-cleaning filter
* 4" and 6" connections
* Max. 3,750 sq. ft. with 4" connections
* Max. 7,500 sq. ft. with 6" connections

Pump Control and 3 Way Valve Control Detail

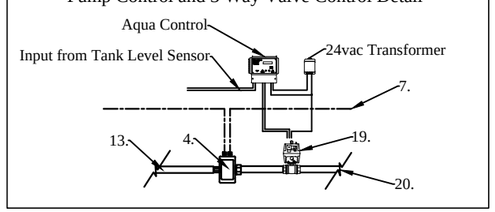

All items referenced can be viewed at RainHarvest.com

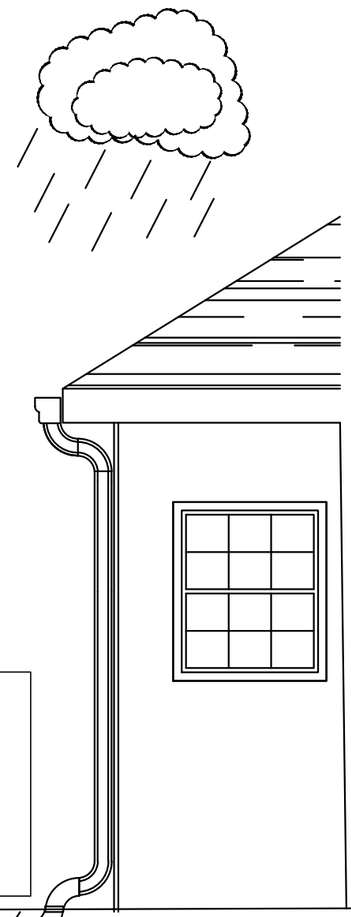

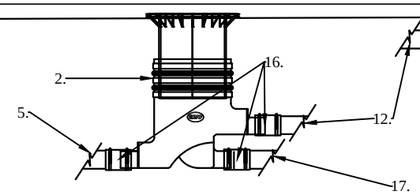

Filter height will be set and and plumbing pitched to best utilize existing grade.
A site assessment should be done prior to installation to determine the optimum levels for filter and plumbing so as to provide positive drainage to tank and stormwater overflows.

NOTE: This drawing is for illustrative purposes only. Actual systems and designs may vary. Always check with local building codes as they will apply.Electrical work to be performed by licensed professional. Points of use shall be labeled as: "**Non Potable water, Do Not Drink!**

CHK BY:	APP BY:	DRAWN BY	QUOTE NO.	SH.#
		CMG	.	1 OF 1

RainFlo 3400IG GRAF Rainwater Collection System

RainHarvest Systems LLC.
6075 Parkway North Drive Suite D
Cumming, GA 30040
Tel: 770-889-2533 Fax: 770-889-2577