REVISIONS				
ZONE	REV	DESCRIPTION	DATE	APPROVED
	B	REDRAWN	02JAN97	

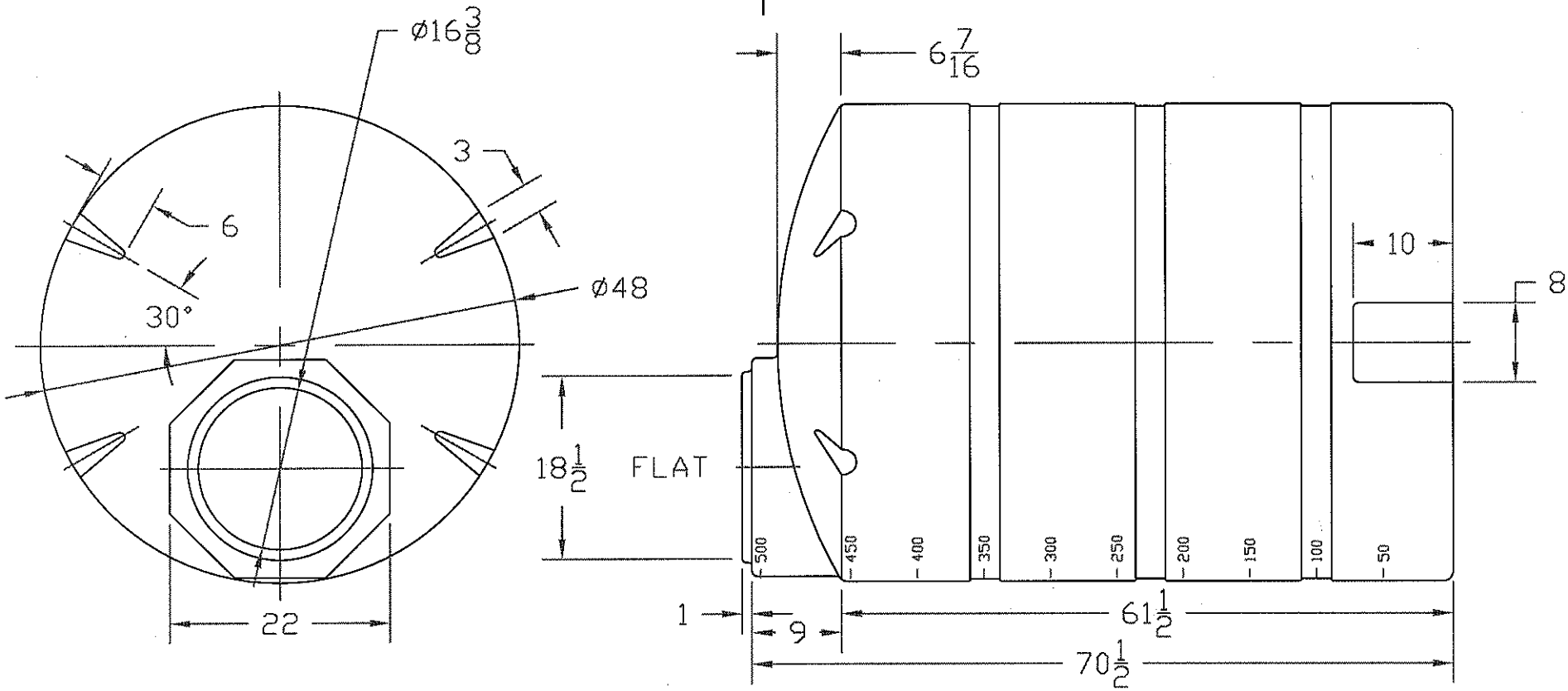

NORWESCO
ST. BONIFACIUS, MN

500 GALLON VERTICAL TANK

JTP 02JAN97	SIZE A	FSCM NO.	DWG NO.	REV B
	SCALE 1/16		SHEET	